DWG. NO.	SH	REV.
FMGG0008	1	

REVISIONS			
REV	DESCRIPTION	DATE	APPROVED

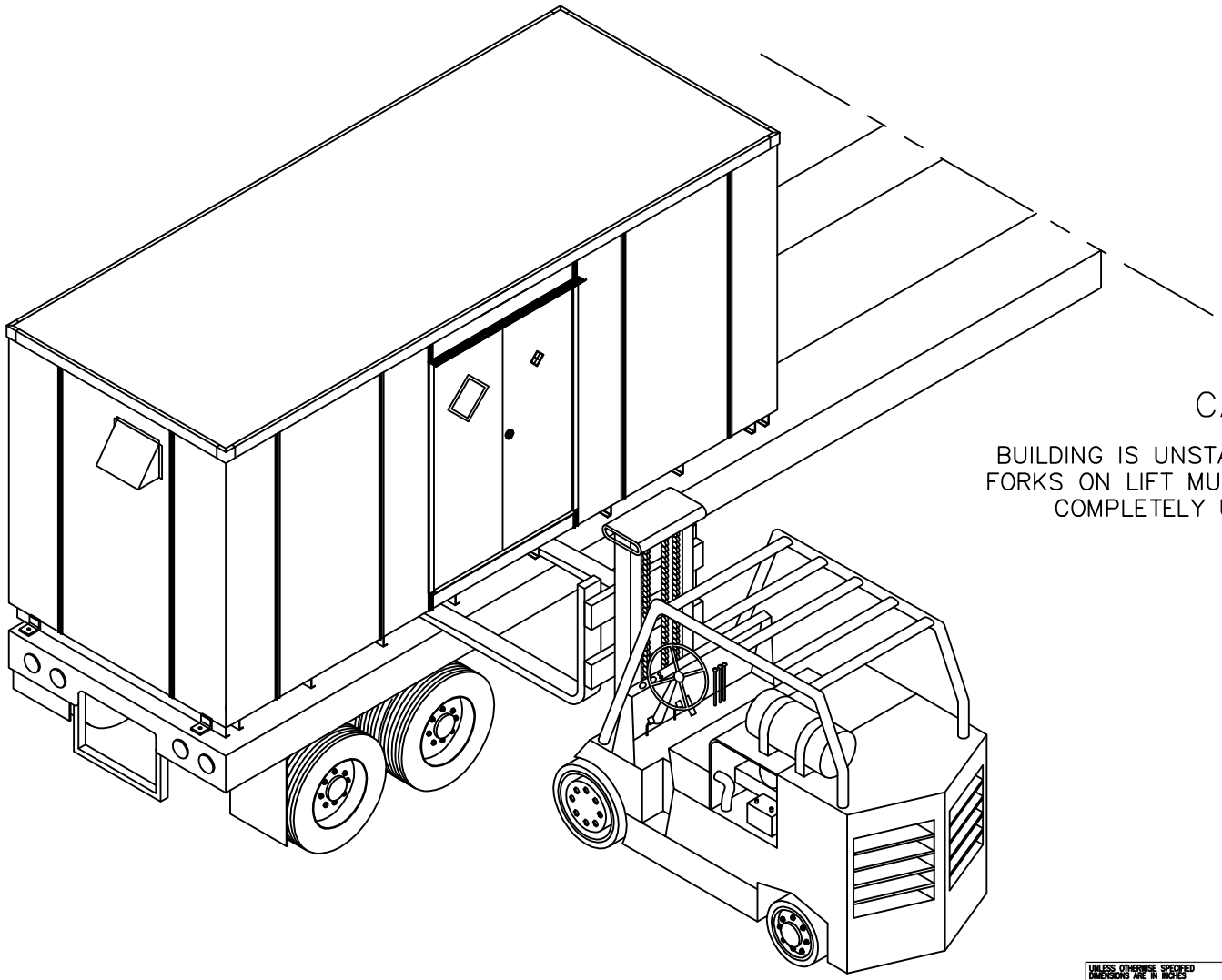

CAUTION

BUILDING IS UNSTABLE WHEN OFF-LOADING.
FORKS ON LIFT MUST BE 8 FEET AND REACH
COMPLETELY UNDER THE BUILDING.

COPYRIGHT © 1996 BY SAFETY STORAGE, INC.
ALL RIGHTS RESERVED
THESE DOCUMENTS ARE NOT TO BE REPRODUCED FOR ANY PURPOSE, IN WHOLE OR IN PART, WITHOUT WRITTEN PERMISSION FROM SAFETY STORAGE, INC.

UNLESS OTHERWISE SPECIFIED DIMENSIONS ARE IN INCHES
TOLERANCES ARE:
FRACTIONS ± 1/16 DECIMALS .XX ± .06 .XXX ± .031 ANGLES ± .5°

MATERIALS:

INV. NUMBER:

APPROVALS	DATE
DRAWN BY: JAH	08/17/96
CHECKED BY:	
MFG. HOLLISTER	
NEXT ASSY:	

DO NOT SCALE DRAWING

SAFETY STORAGE
2301 BERT DRIVE
HOLLISTER, CA. 95023
PHONE: (408)637-5895
FAX: (408)637-7405

FORKLIFT OFFLOADING INSTRUCTIONS AND RECOMMENDATIONS

SIZE	DRAWING NO.	REV
B	FMGG0008	

SCALE 1/1 | FILE: FMGG0008 | SHEET 1 OF 1